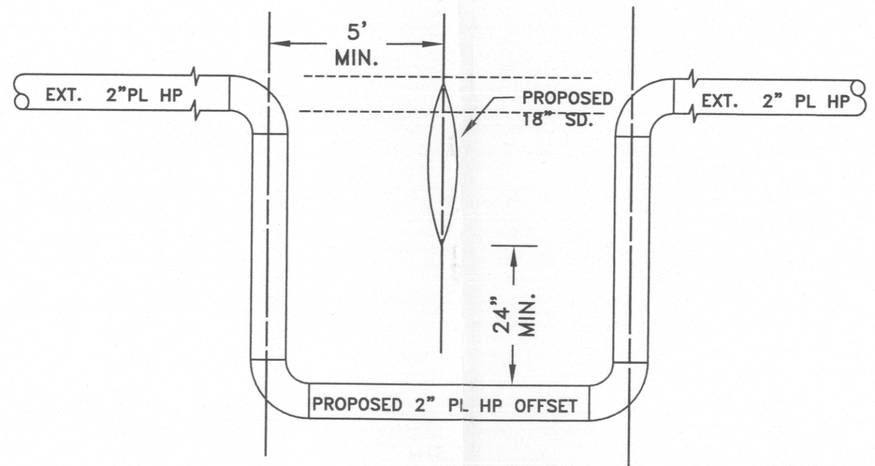


DETAIL "C"
NTS

SAN JOAQUIN COUNTY OR THEIR CONTRACTOR TO SET GRADE TO BOTTOM OF SD TO INSURE PROPER CLEARANCE OF GAS PIPE.

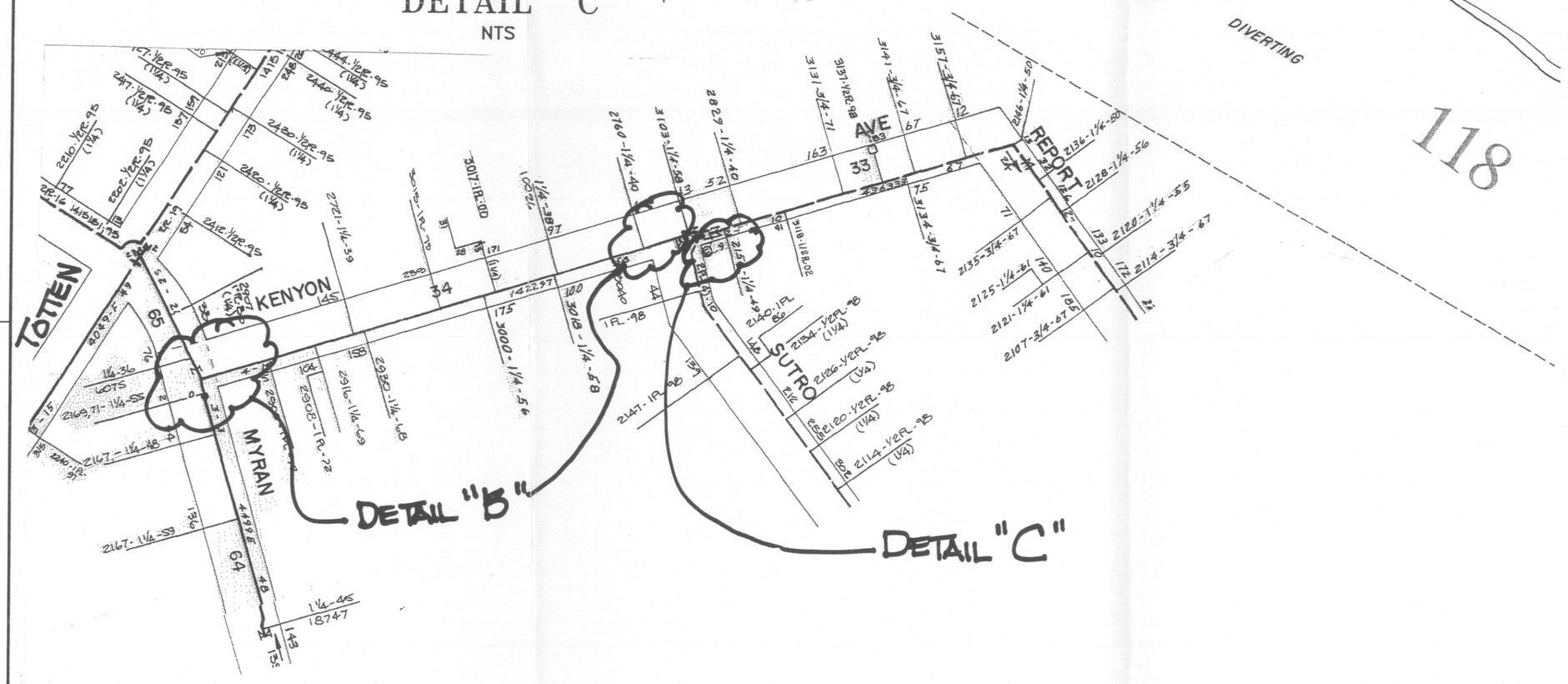


118

INSTALL (2) 2", 3" or 4" MUELLER PCF, BOTTOM- CONNECTION, ANSI-150.
PLUG OFF AND CLEAR STORM DRAIN AS SHOWN.
SAN JOAQUIN COUNTY TO VERIFY ELEVATIONS TO INSURE PROPER CLEARANCES.

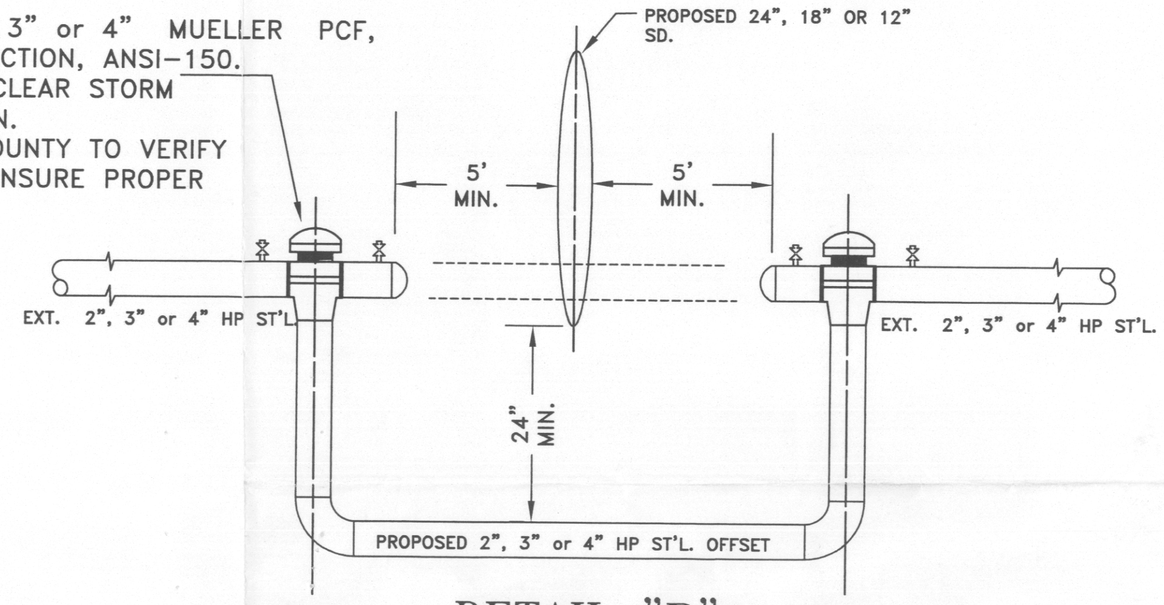


DETAIL "B"
NTS

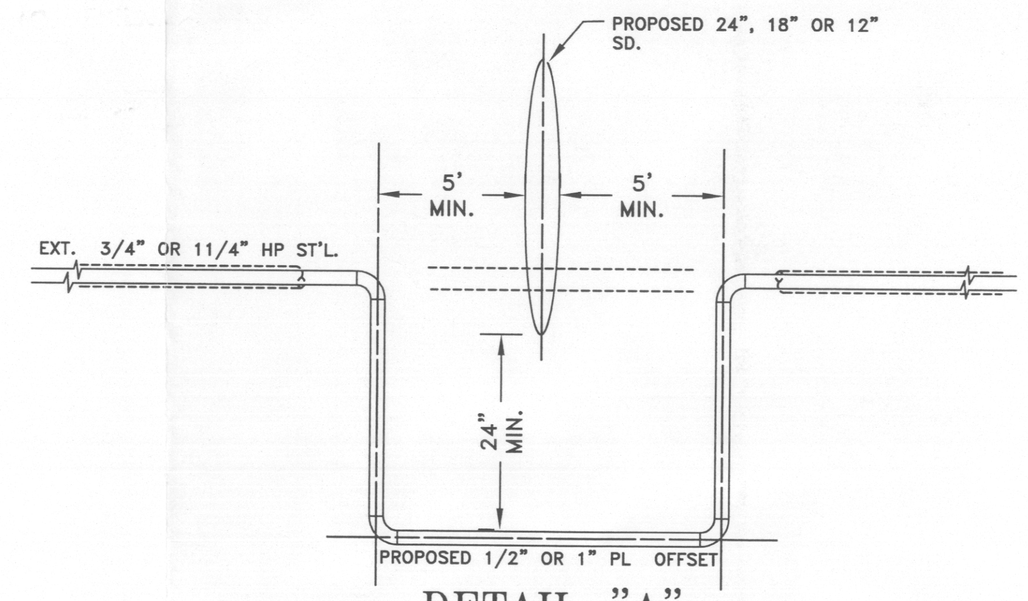


DETAIL "A"
NTS

IF NECESSARY

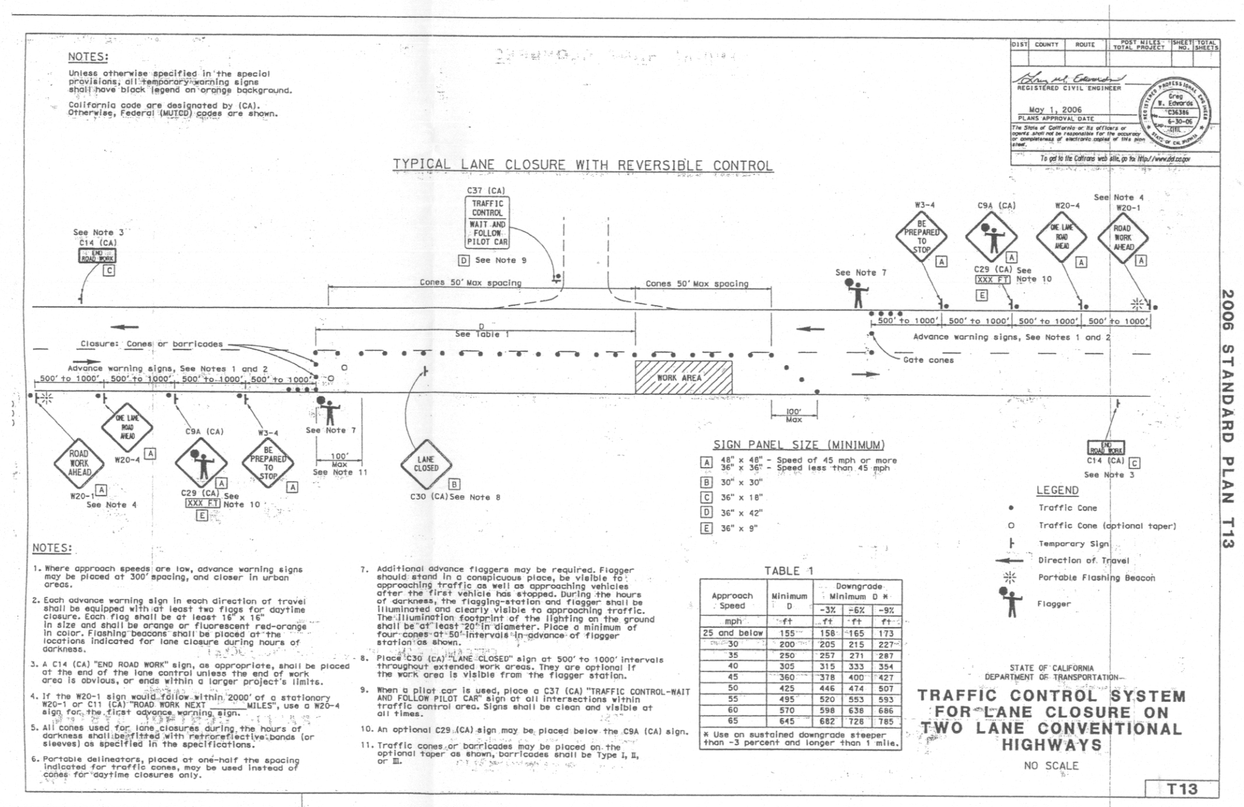


PLASTIC PIPE INSPECTION/DATA

PIPE MANUFACTURER _____

DATE MANUFACTURED _____

Welding Inspected per PG&E Gas Standard D-40
Visual ☐
Magnetic Particle ☐
Inspector _____
Date _____

* TEST DATA STAMP *

ACTUAL TEST PRESSURE _____ psig
DURATION OF TEST _____
DATE OF TEST _____

— N —
SAN JOAQUIN COUNTY

WM 3005-B4, B5
CPA #300514
TBA #0-05
E.M. ZONE #16-ST-07-B

CALL BEFORE YOU DIG
USA
800-227-2600

| | |
|---|---|
| CO: | |
| SD: | |
| NOTIF.: 102263694 | |
| Other: 30551870.DWG | |
| SHT: 1 OF 1 | SHEETS |
| PM: 30551870 | REV. |

ENGINEERING AND PLANNING DEPT.
4040 WEST LANE
STOCKTON, CA 95204
PHONE #:(209) 942-1429 FAX #:(209) 941-1737
PG&E PACIFIC GAS AND ELECTRIC COMPANY

EST: R.D.GIBBS
ADE: R.D.GIBBS
SUPV: M.R.FERNANDES
REP: D.C.RYMERS
PLNR: D.C.RYMERS
SCALE: 1"=40'
DATE: 5/29/2007

| NO. | DATE | DESCRIPTION | ORDER # | DWN | CHKD | SUPV | APV'D BY |
|---|---|---|---|---|---|---|---|

REVISIONS

RELOCATE MAINS & SERVICES
VARIOUS LOCATIONS
SAN JOAQUIN COUNTY
STOCKTON DIVISION

EP.07.149